mm [inch]

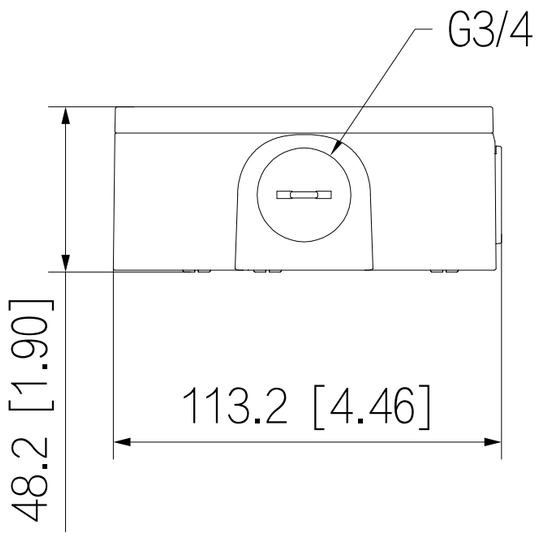
G3/4
48.2 [1.90]
113.2 [4.46]

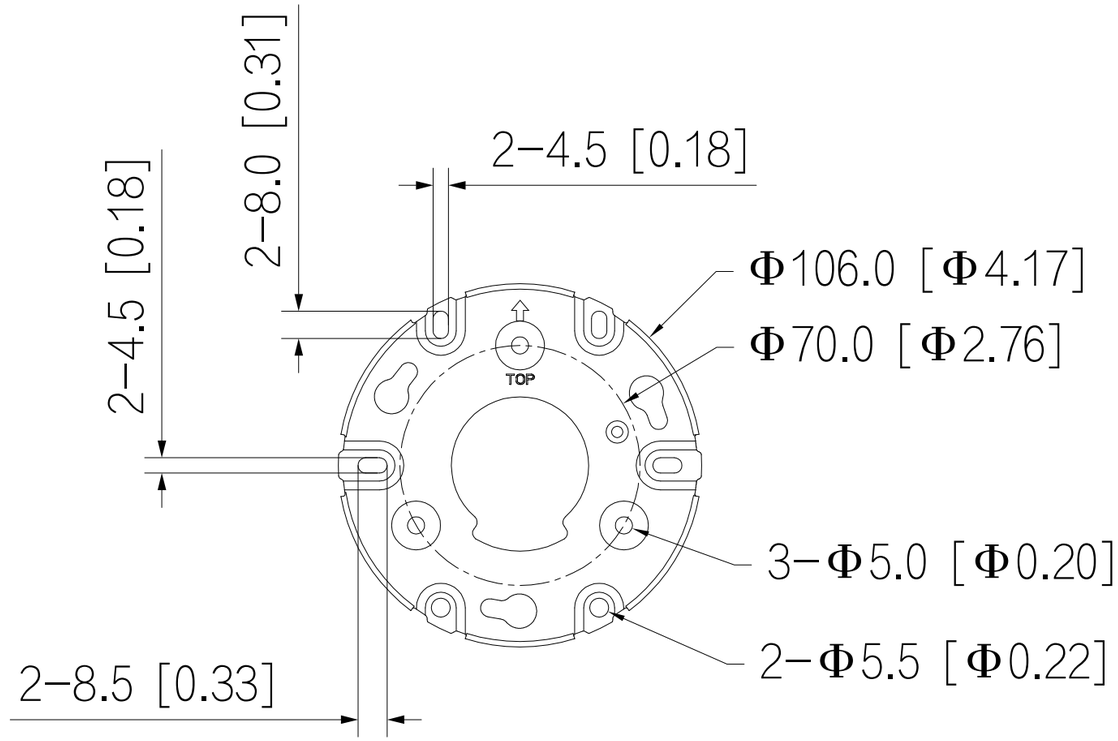
2-8.0 [0.31]
2-4.5 [0.18]
2-4.5 [0.18]
Φ106.0 [Φ4.17]
Φ70.0 [Φ2.76]
TOP
3-Φ5.0 [Φ0.20]
2-Φ5.5 [Φ0.22]
2-8.5 [0.33]

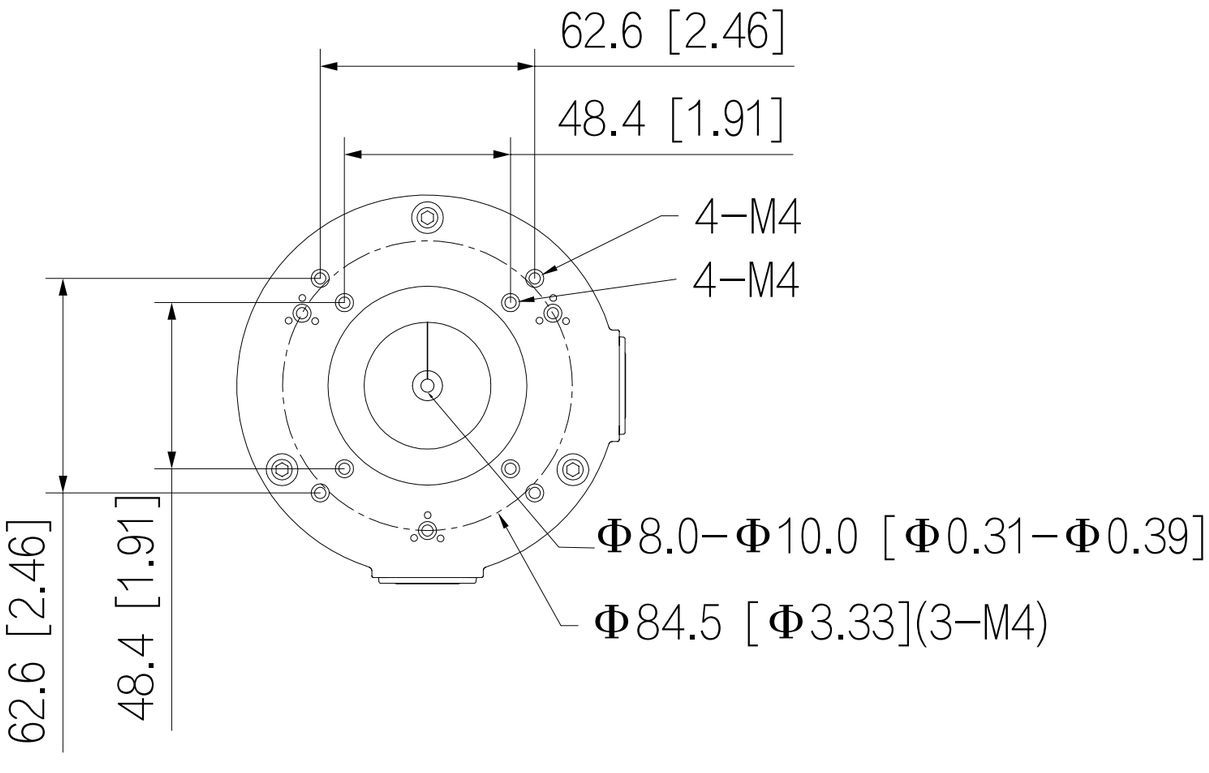
62.6 [2.46]
48.4 [1.91]
4-M4
4-M4
Φ8.0-Φ10.0 [Φ0.31-Φ0.39]
Φ84.5 [Φ3.33](3-M4)
62.6 [2.46]
48.4 [1.91]

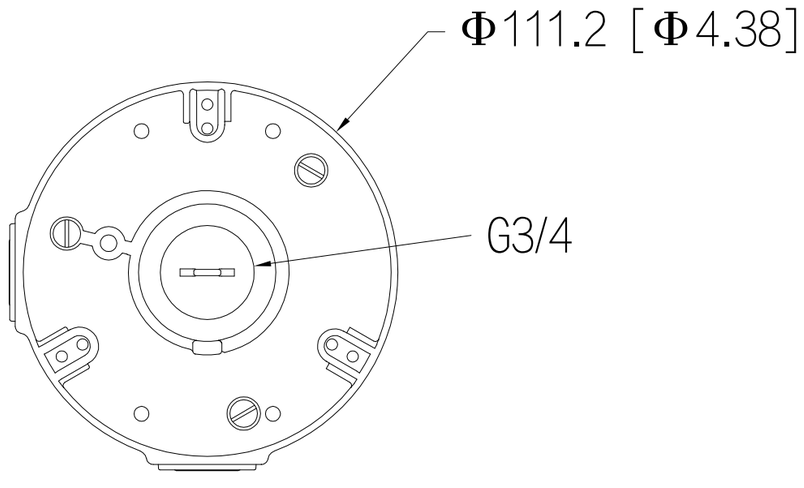
Φ111.2 [Φ4.38]
G3/4